ARM6000-C215-C8-T

- Rockchip RK3568/RK3576/RK3588
- High performance tablet computer

Features

- Rockchip RK3568/RK3576/RK3588
- Rich I/O interfaces
- Support 12-24V DC power supply
- Fanless design, Support panel mounting and VESA mounting

Specifications

Model Name		ARM6000-C215-C8-T		
CPU	CPU	Rockchip RK3568 Quad-core Cortex-A55 up to 2.0GHz	Rockchip RK3576 8-core 4*Cortex-A72+4*Cortex-A53 up to 2.2GHz	Rockchip RK3588 8-core 4*Cortex-A55+4*Cortex-A76 up to 2.4GHz
	GPU	G52 GPU	G52 MC3	Mali-G610 MC4
	NPU	1ToPS (INT8)	6ToPS (INT8)	6ToPS (INT8)
Memory	Type capacity	Onboard LPDDR4 4GB/8GB		
Storage	eMMC	Onboard 32GB/64GB eMMC		
	TF	1 x TF card slot, supporting storage expansion		
	Mini-PCIe	1 x Mini-PCIe slot Support mSATA SATA 3.0 SSD (RK3568/RK3588 support, Reuse with 4G/Wi Fi 6)		
	SATA 3.0	1 x SATA 3.0, Support mSATA SATA 3.0 SSD (RK3576/RK3588 support)		
I/O	Network	2 x 10/100/1000Mbps RJ-45 Ethernet Interface		
		On board 2.4G/5G Wi-Fi, support Wi-Fi 802.11 a/b/g/n/ac protocol + Bluetooth 5.0		
		1 x Mini-PCIe slot, support LTE 4G/Wi-Fi 6 modules (Optional),1 x M.2 slot, support 5G modules (Optional)		
	USB	3 x USB2.0 , 1 x USB3.0 (OTG multiplexing)		
	Audio	2 x Ø3.5 phonejack speaker interface (8Ω 6W / Built in 8Ω 2.5W speaker (Optional) , 1x Mic in (Optional)		
	COM	1 x RS485 (3.5mm-2PIN termina l) , 1 x RS232 (DB9) , 3 x RS232/RS485 (Optional)		
	SIM	1 x Micro SIM card slot (with card holder)		
	LED	1 x Power LED (green on) ,1 x System LED (blue on)		
	Display	1 x HDMI interface, supporting up to 4K (3840*2160)/8K (7680*4320 RK3588) output		
	Key	1 x Recover flashing button, 1 x Power button		
LCD	LCD Size	21.5" TFT		
	Resolution	1920*1080		
	Luminance	250cd/m2		
	Backlight MTBF	30000hrs		
Touchscreen	Touh Type	Multipoint Capacitive Touch Screen		
	Transmittance	>87%		
	Touch Interface	USB		
OS	Android	Android 11	Android 14	Android 13
	Linux	Debian 11、Ubuntu 20.04	Debian 12、Ubuntu 22.04	Debian 11、Ubuntu 20.04
Power Supply	Voltage Input	DC 12~24V ±10%, overcurrent, overvoltage and polarity inverse protection		
	Power Consumption	≤20Watt		
Chassis	Structure	Aluminum magnesium alloy shell, fanless design; Support panel mounting and VESA mounting		
	Dimensions	548.8 mm x 340.3mm x 49mm		
	Drill Hole Size	540.8mm x 332.3mm		
	Net Weight	5.5kg		
Environment	Work Temperature	0 ~ 50℃		
	Storage Temperature	-40 ~ 85℃		
	Relative Humidity	5~95% @40° (non-condensing)		
	Operating Vibration	SSD applied:1.5Grms,IEC 60068-2-64,random,5~500Hz,1 hr/axis		
	Operating Shock	20G peak acceleration(11ms duration) with SSD, Follow IEC60068-2-27		
	EMC	CE/FCC Class A		

All product specifications are subject to change without notice.

Ver: 1.3 Last updated: 4-Aug-2025

■ Dimensions (Unit: mm) :

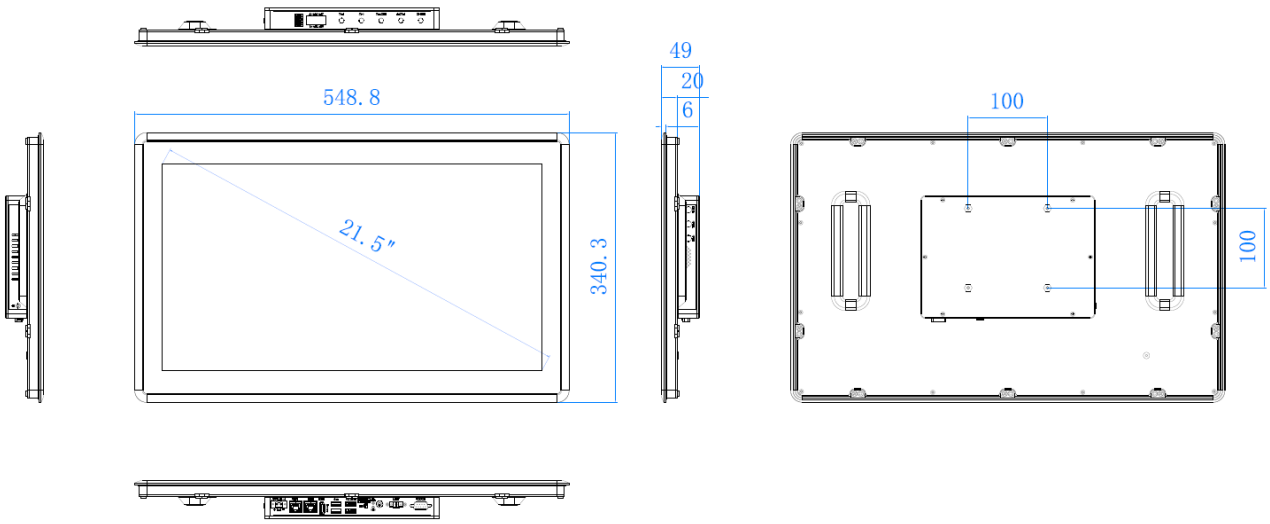

Note: If some optional parts are offered with the system, additional system certificates may be required in certain regions/countries.
Please contact NODKA for certificate compliance.

■ Interfaces

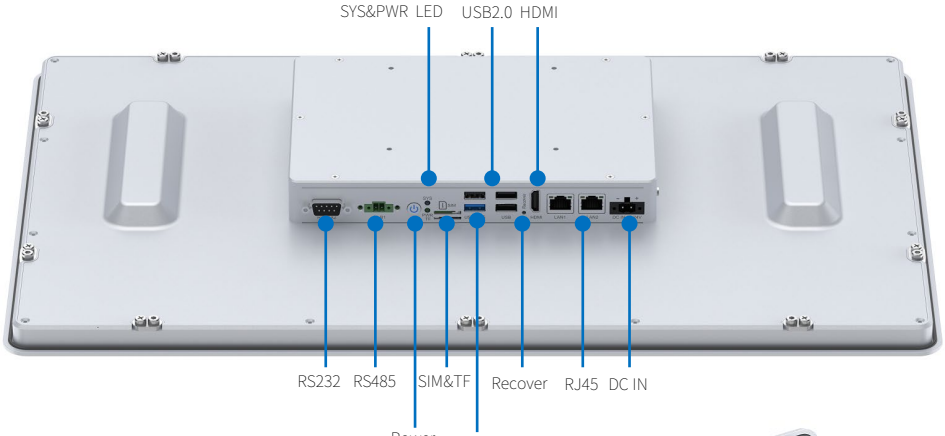
SYS&PWR LED
USB2.0
HDMI
RS232
RS485
SIM&TF
Recover
RJ45
DC IN
Power Button
USB3.0/OTG

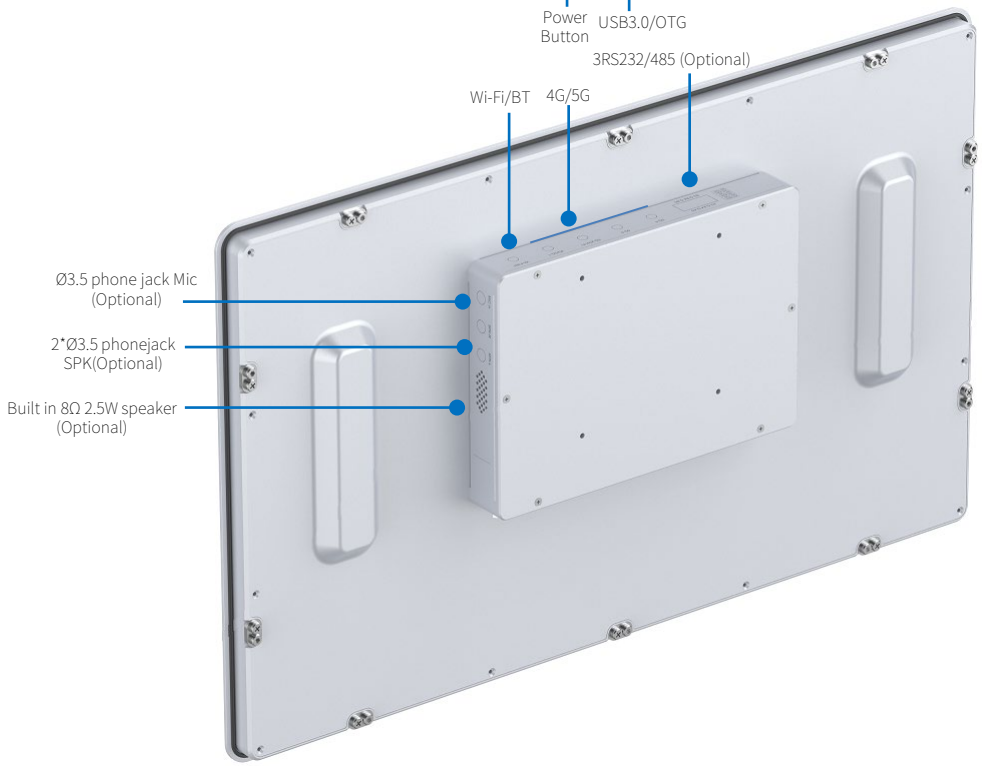
3RS232/485 (Optional)
Wi-Fi/BT
4G/5G
Ø3.5 phone jack Mic (Optional)
2*Ø3.5 phonejack SPK(Optional)
Built in 8Ω 2.5W speaker (Optional)

■ Ordering Information

Part No.	Product	Description
B81.AC215.38.0001	ARM6000-C215-C8-4G32-3568-T	21.5", RK3568, 4G, 32G, Capacitive touch , 1920*1080, DC IN 12~24V 2*GLAN ,3*USB2.0 1*USB3.0,1*RS232 1*RS485 3*RS232/485(Optional) ,1*2.4G/5G Wi-Fi,1*Mini-PCIE support LTE 4G/Wi-Fi 6,1*M.2 support 5G, Ø3.5 phonejack speaker, Built in speaker (Optional) , 1x Mic in (Optional) , Operation temperature : 0~50 ℃
B81.AC215.38.0002	ARM6000-C215-C8-8G64-3568-T	21.5", RK3568, 8G, 64G, Capacitive touch , 1920*1080, DC IN 12~24V 2*GLAN ,3*USB2.0 1*USB3.0,1*RS232 1*RS485 3*RS232/485(Optional) ,1*2.4G/5G Wi-Fi,1*Mini-PCIE support LTE 4G/Wi-Fi 6,1*M.2 support 5G, Ø3.5 phonejack speaker, Built in speaker (Optional) , 1x Mic in (Optional) , Operation temperature : 0~50 ℃
B81.AC215.76.0001	ARM6000-C215-C8-4G32-3576-T	21.5", RK3576, 4G, 32G, Capacitive touch , 1920*1080, DC IN 12~24V 2*GLAN ,3*USB2.0 1*USB3.0,1*RS232 1*RS485 3*RS232/485(Optional) ,1*2.4G/5G Wi-Fi,1*Mini-PCIE support LTE 4G/Wi-Fi 6,1*M.2 support 5G, Ø3.5 phonejack speaker, Built in speaker (Optional) , 1x Mic in (Optional) , Operation temperature : 0~50 ℃
B81.AC215.76.0002	ARM6000-C215-C8-8G64-3576-T	21.5", RK3576, 8G, 64G, Capacitive touch , 1920*1080, DC IN 12~24V 2*GLAN ,3*USB2.0 1*USB3.0,1*RS232 1*RS485 3*RS232/485(Optional) ,1*2.4G/5G Wi-Fi,1*Mini-PCIE support LTE 4G/Wi-Fi 6,1*M.2 support 5G, Ø3.5 phonejack speaker, Built in speaker (Optional) , 1x Mic in (Optional) , Operation temperature : 0~50 ℃
B81.AC215.58.0001	ARM6000-C215-C8-4G32-3588-T	21.5", RK3588, 4G, 32G, Capacitive touch , 1920*1080, DC IN 12~24V 2*GLAN ,3*USB2.0 1*USB3.0,1*RS232 1*RS485 3*RS232/485(Optional) ,1*2.4G/5G Wi-Fi,1*Mini-PCIE support LTE 4G/Wi-Fi 6,1*M.2 support 5G, Ø3.5 phonejack speaker, Built in speaker (Optional) , 1x Mic in (Optional) , Operation temperature : 0~50 ℃
B81.AC215.58.0002	ARM6000-C215-C8-8G64-3588-T	21.5", RK3588, 8G, 64G, Capacitive touch , 1920*1080, DC IN 12~24V 2*GLAN ,3*USB2.0 1*USB3.0,1*RS232 1*RS485 3*RS232/485(Optional) ,1*2.4G/5G Wi-Fi,1*Mini-PCIE support LTE 4G/Wi-Fi 6,1*M.2 support 5G, Ø3.5 phonejack speaker, Built in speaker (Optional) , 1x Mic in (Optional) , Operation temperature : 0~50 ℃

■ Options

Parts	Description
Power adapter	KPL-040F-v1 40W adapter kit , DC out 12V, with national standard power cord
Wi-Fi external antenna	Glue stick antenna,suction cup 3M antenna
mSATA SSD	128GB, 256GB, 512GB , 1TB
SATA 3.0 SSD	128GB, 256GB, 512GB , 1TB
Wi-Fi 6 Set kit	miniPCIE Wi-Fi Set kit (BL-M8852BP3) , support Wi-Fi 802.11 a/b/g/n/ac/ax protocol ＋Bluetooth 5.2
3G/4G Module kit	mini PCIE, EC20, EG25, EC25
5G Module kit	M.2 Set kit (Quectel_RM500U)
3RS232/485 module kit	RS232 or RS485 can be configured
Mount Option	VESA-mounted